REV	DATE
A	27.11.2019

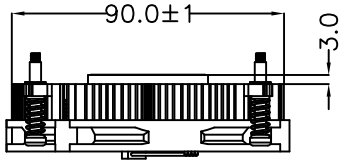

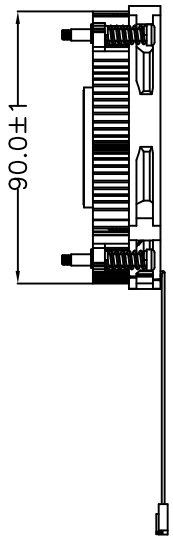

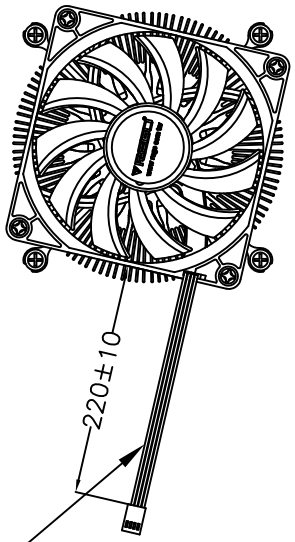

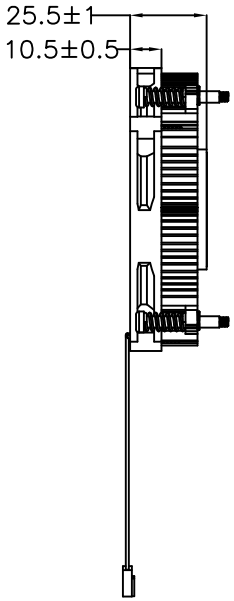

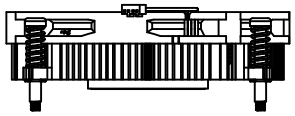

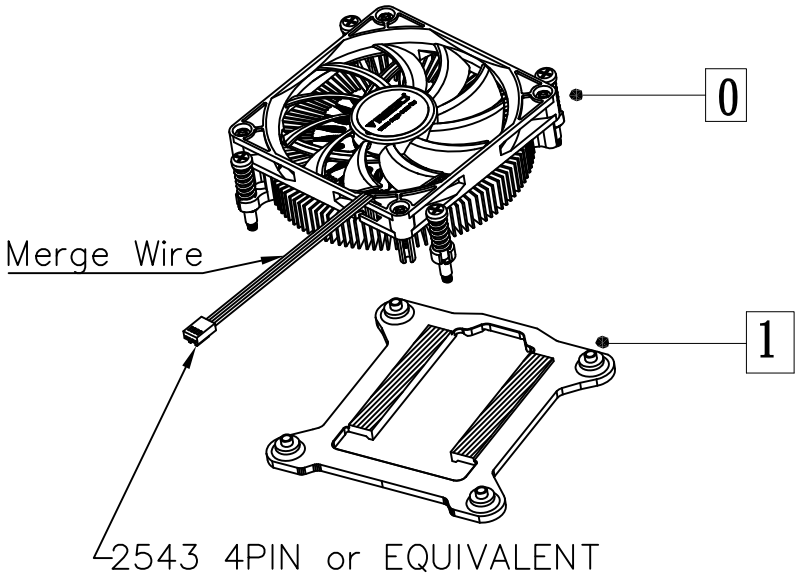

Scale 4:1

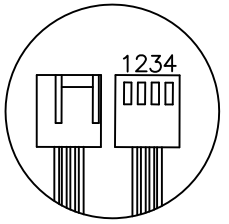

NOTES
1.LEAD WIRE UL 1061 AWG#26
PIN 1:BLACK WIRE---(-)
PIN 2:YELLOW WIRE---(+)
PIN 3:GREEN WIRE---(SIGNAL)
PIN 4:BLUE WIRE---(PWM INPUT)
2.HOUSING:2543-4P(RICE WHITE) OR EQUIVALENT

Notes:

ITEM	DESCRIPTION	MATERIAL	FINISH/COLOR	Qty
0	Label	ELECTROPLATING MATT SILVER POLYESTER FILM LABEL	silver	1
1	Fan Screw	steel	bright nickel	4
2	Fan	engineering plastic	black	1
3	Screw	steel	bright nickel	4
4	Spring	piano wire	nickel	4
5	Heat Sink	AL6063+Copper	Cleaning	1
6	E-ring	steel	nickel	4
7	Grease	X23-7762	gray	1
8	Plate	PBT+30%GF	Black	1

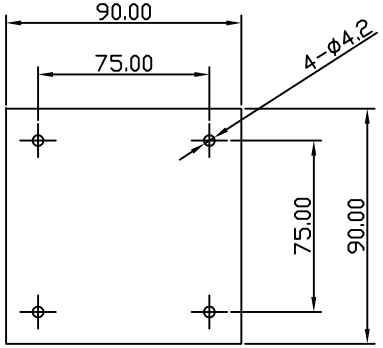

PCB LAYOUT

PROPRIETARY NOTE:
This document contains confidential information and proprietary to Rego Electronics and shall not be reproduced or disclosed to other documents or used for any purpose other than that for which was obtained without the expressed written consent of Rego Electronics.

.X ± 0.30	APPROVED: Chris	REGO® http://www.rego.com.tw
.XX ± 0.20	CHECKED: Levi	
.XXX± 0.15	DRAWN: Vic	TITLE: 1U CPU COOLER FOR INTEL 115X PROCESSORS
X° ± 3°	UNITS: mm / SCALE: NONE	PART NO: RG3129-25
		SHEET: 1 OF 1