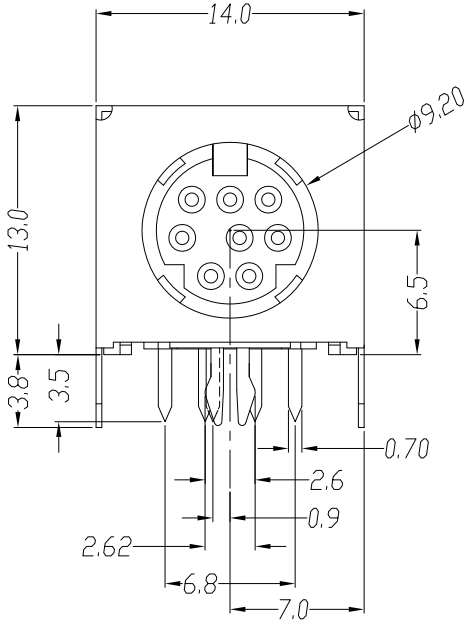

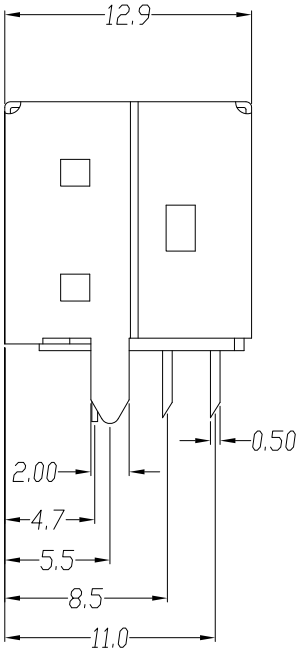

Specification:

Contact Resistance: 30m Ohm Max.
Insulation Resistance: 100M Ohm Min;AT 500V DC.
Rated Voltage And Current: DC12V.2A Max;AC 100V.1A Max.
Dielectric Withstanding Voltage: 250V AC For 1 Minute.
Durability (Life Test): 100 Cycles.
Insertion Force: 4.0KG Maximum.
Extraction Force: 0.9KG Minimum.

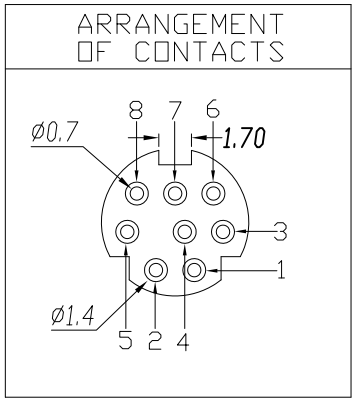

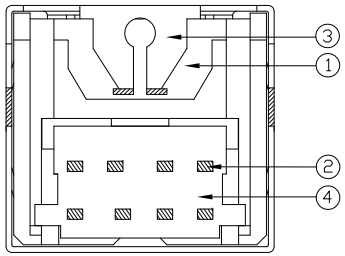

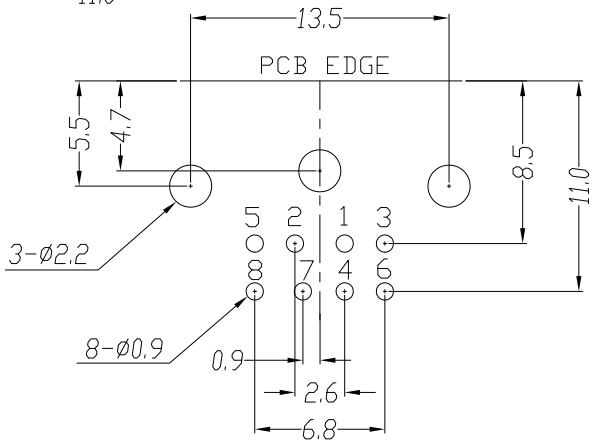

PCB LAYOUT
(BOTTOM VIEW)

NO.	NAME	MATERIAL	FINISH	Q'TY
1	HOUSING	PBT G.F.	BLACK	1
2	CONTACT	PHOS. BRONZE T:0.2	Gold:1~3u"; NI:40~60u"; TIN:120u" (100% pure Tin of lead free plating)	8
3	SHIELD	BRASS T:0.3	TIN PLATED Sn:120~200u"	1
4	BOTTOM COVER	PBT G.F.	BLACK	1

REV	DATE
A	03.15.2016

PROPRIETARY NOTE:
This document contains confidential information and proprietary to Rego Electronics and shall not be reproduced or disclosed to other documents or used for any purpose other than that for which was obtained without the expressed written consent of Rego Electronics.

.X ± 0.30
.XX ± 0.20
.XXX± 0.15
X° ± 3°

APPROVED: Chris
CHECKED: Denny
DRAWN: Bryan

REGO®
http://www.rego.com.tw

TITLE:MINI DIN JACK 8 POSITIONS

UNITS: mm
SCALE: NONE

PART NO:80203-508B8L
SHEET: 1 OF 1